MPKIO

BATTERY POWERED

EN [m - kg]

REMOTE CONTROL FORWARD & REVERSE FUNCTIONS

REMOTE CONTROL

- Proportional & Precise
- Intuitive layout
- Spare battery on board

+ WIRE CONTROL

- Intuitive wire control

990 KG HOOK

SPECIAL FEATURES

- 990 kg runner Jib
- USB port for phone charging
- Big tool box
- Vacuum pump on board
- Removable counterweight

990 KG GLASS MANIPULATOR

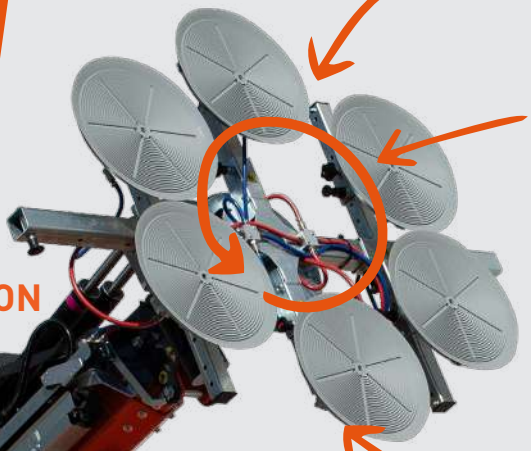

360° MANIPULATOR ROTATION

MAIN BOOM

- 990 kg MAX capacity
- 2 hydraulic extensions
- High-resistance steel

600 KG GLASS MANIPULATOR

LONG-LASTING BATTERY

- 220V charger
- 110 V charger

± 9° ROTATION

SIDE STABILISERS

WHEELS

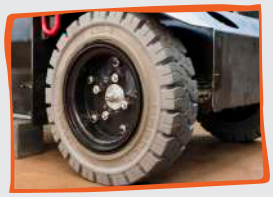

- Twin wheels available
- White non-marking tires available

DIMENSIONS (mm)

SCAN FOR MORE TECHNICAL DATA

Your Jekko Dealer

	Kg
MPK10	**1045**
Counterweight	**230**
JVM10	**165**

LOAD CHART WITH 990 KG MANIPULATOR

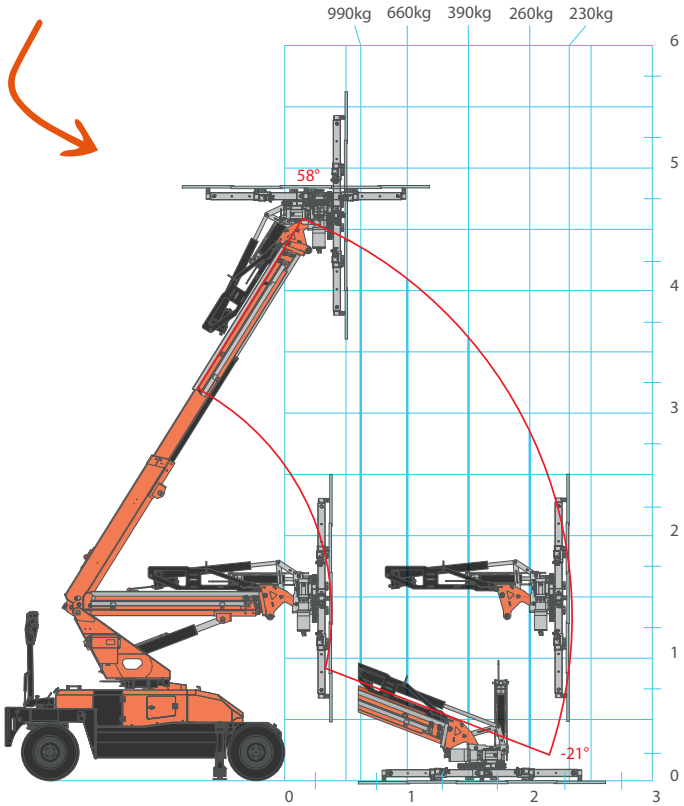

LOAD CHART WITH RUNNER JIB

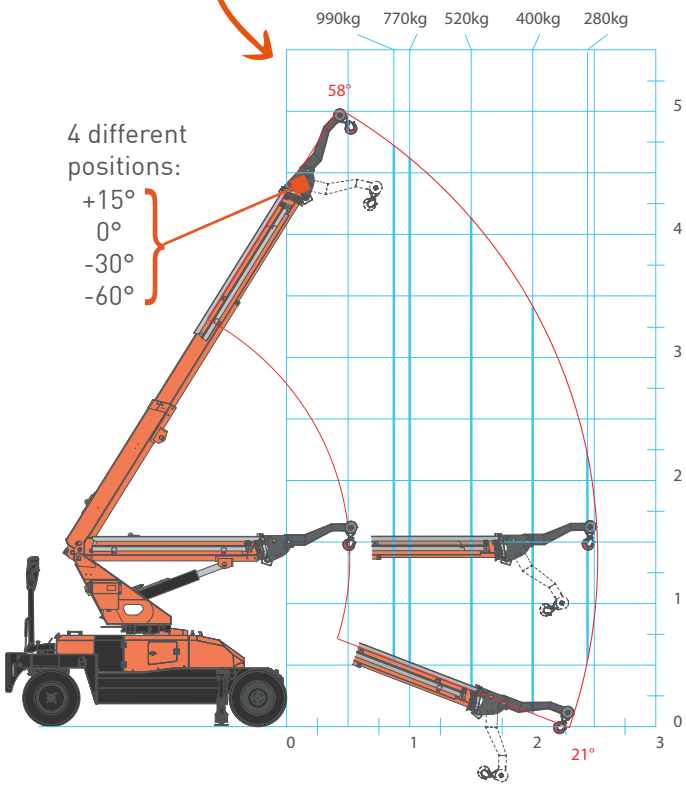

ACCESSORIES

JVM10EV
990 kg glass manipulator

JVM06EV
600 kg glass manipulator

990 kg RUNNER JIB

Jekko s.r.l. • Via Campardone, 1 - 31014 Colle Umberto (TV) Italy • info@jekko.it • www.jekko-cranes.com

All specifications and features herein described can be changed without prior advice. All indicated data are indicative only and are not binding as crane performs differently depending on its use.